Design of a Battery Powered Induction Stove

Umar Farouk Ibrahim*[1], Zaiyanu Nuhu [1]

[1] Department of Electrical/Electronic Engineering, Nuhu Bamalli Polytechnic, Zaria

Abstract: Many household in resource constrained regions still rely on biomass and kerosene for cooking, producing indoor air pollution contributing to greenhouse gas emmissions. Electric induction cooking is a cleaner and more efficient alternative but dependence on stable AC mains prevents broad uptake where grid access is unreliable. This paper describes the design, implementation and laboratory validation of a 24V DC, battery-operable induction stove based on a current-fed, full bridge, parallel-resonant converter. The converter was developed to run directly from common low-voltage DC source (eg two 12V bateries is series or small photovoltaic arrays) and to achieve soft-switching to reduce switching losses. A 500W prototype was built and and evaluated in the laboratory. Representative experimental results show a peak measured effeciency of 90.1% at the 24V nominal operating point, stable thermal behaviour and 1L water boil time of approximately 5.6minutes. The primary contribution is an engineering realization and experimental validaion of a low voltage, battery-operable induction solution suitable for off-grid and intermittent-grid contexts.

Keywords: Battery-operable induction, current-fed converter, low-voltage DC, parallel resonant

1.0 INTRODUCTION

Access to clean efficient cooking is an important public-health and development goal. Combustion of biomass fuels emits particulate matter and other pollutants that cause respiratory and other ilness (Kumar & Singh, 2019). Electric cooking, particularly induction avoids local combustion emissions and delivers high energy transfer efficiency because heat is generated directly within the cookware.

The main barrier to adoption of electric induction in many regions is unreliable or absence of electricity supply. Converting battery or photovoltaic (PV) DC due to the high-voltage AC required by commercial induction units typically involves an inverter and rectifier chain that adds conversion losses and complexity. A design that operates directly from a low-voltage DC supply (here 24V) removes the need for a seperate inverter sage, reducing total system losses and simplifying integraion with battery and PV systems.

This work presents the design choices, prototype implementaion and laboraory validation of a 24V DC induction sove employing a current-fed full bridge parallel converter. The novelty claimed is not invention of a fundamentally new resonant topology but rather the application and engineering adaptation of the current-fed parallel resonant converter for low-voltage consumer scale induction cooking together with a detailed experimental characterization that demonstrates practical performance in off-grid contexts.

1.2 Background and Related work

Induction heaing for cooking has been widely studied and commercialised, typical topoplogies include series resonant and quasi resonant converters operated from high-

NJST Preprint

voltage AC mains (Jian, Zhang & He, 2009; Dimitrakakis & Safacas, 2010). These designs are optimized for grid voltages (eg 220-240V AC). Industrial induction heating literature also reports parallel resonant and Class E style amplifiers. (Yoshida, Tokumasu & Omori, 2002), but prior publications rarely document the use of current-fed parallel resonant arrangement for low-voltage consumer cooking.

A focused literature review shows many commercial devices and reference designs (eg application notes from major semicondutor vendors) that report resonant-converter efficiencies up to 90% in controlled conditions with practical commercial efficiencies often in he 70 -85% range (Gaspar, Garcia & Quintana, 2011). The contribution of this paper is therefore practical, adapting and validating a current-fed , full-bridge parallel resonant converter to operate from 24V DC with high efficiency and safe thermal performance for household cooking tasks.

1.3 Converter Topology and Design Rationale

Topology overview

A current-fed, full-bridge, parallel resonant topolgy was selected for several reasons;

i. Current feeding (using a DC side choke) decouples the DC source from the resonant tank and provides continuous current capability that helps maintain soft swithing a low DC voltages.
ii. The full-bridge allows bi-diretional voltage excitaion across the resonant tank, increasing achievable voltage amplitude on the resonant network without raising the DC bus.
iii. A parallel resonant tank concentrates circulating energy in the tank and places most switching stress on the switches only when load current requires transfer to he cookware. This can reduce device stress relative to some series topology at low supply voltage.

1.4 Resonant frequency and coil design

The resonant frequency is give as;

$$f_r = \frac{1}{2\pi\sqrt{LC}} \quad (1.1)$$

where L is the resonant inductance (coil) and C the resonant capacitance. For this design we selected f_r = 50kHz. The 50kHz decision balances coil size (higher frequency, smaller coil) against MOSFET switching losses and skin/hysteresis losses in cookware materials. Operating near (slightly above) resonance supports soft switching (ZVS/ZCS depending on exact conditions) and good power transfer to typical ferromagnetic cookware.

1.5 Device selection and gate drive

Power MOSFET were chosen based on voltage on-resistance, switching speed and availability. The prototype uses MOSFETs rated for the expected voltages and currents (hundreds of volts are not required at nominal operation but margin for transient overshoots was included). Gate drivers supply the required gate voltage and fast drive current to achieve intended switching times while preserving dead-time control to enforce soft switching. Schottky diodes were added across the MOSFETs to provide low forward-drop conduction paths and reduce

NST Preprint

reverse-recovery losses relative to intrinsic body diodes.

1.6 Summary of the Proposed Approach

Given the inefficiencies of biomass and resistive cooking methods, induction heating represents a clean, efficient, and scalable solution. By employing well-established resonant converter topologies, it is possible to design induction stoves optimized for high efficiency, robust performance, and compatibility with decentralized power systems such as batteries and solar energy.

This paper builds on prior research to investigate the use of series resonant and quasi-resonant converter architectures for induction cooking. The work aims to evaluate the trade-offs between these two topologies, identify optimal configurations for deployment in developing regions, and propose a design framework for cost-effective, sustainable electric cooking solutions.

2.0 Literature Review

Despite substantial progress in resonant and quasi-resonant converter designs for induction cookers, several critical limitations remain. For example, recent work on quasi-resonant cooktops wih zero-voltage switching improves effeciency under heavy loads but assumes standard AC or high DC supply and relies on complex control circuitry (Aksoz, 2024). Solar-powered induction cookers have been proposed often with MPPT controllers and battery storage yet many designs still require voltage boosting (DC – DC converters) or operate with input voltages that are significantly higher than those available from small off-grid or low-voltage battery systems (Ahmad et al, 2024; Ochoa Aviles, 2020). Notably, Weber (2015) introduced a battery-powered induction stove from operating from 24V DC using current fed full-bridge parallel resonant converter, marking one of the few examples of low-voltage DC input. However, that design targets 500W – 1KW output and leaves open questions regarding scalability, thermal management under transient load, component cost and ease of control under voltage fluctuations (Weber, 2015).

Therefore, the gap in the literature lies in the development of induction cooker topologies that;

(a) Can operate efficiently from very low voltage DC sources (eg 24V)
(b) Maintain high performance under variable input conditions (such as brown-outs or partial shading in solar setups)
(c) Use simpler lower cost components and control schemes to make them viable for deployment in energy-constrained or off-grid settings and
(d) Optimize thermal, magnetic and switching losses across a broader power range (from medium to high power) while ensuring safety and manufacturability. The present work address this gap by proposing a full-bridge parallel resonant converter design optimized for low-voltage DC input (24V) with reducedcontrol complexity and enhanced robutness under input voltage fluctuations.

A major shortcoming of the existing literature is the limited exploration of alternative converter topologies. While some academic work has presented Class E amplifier designs for induction stoves

NJST Preprint

(Yoshida et al., 2002), few other converter topologies have been thoroughly investigated for cooking applications. For example, one study claimed to use a parallel resonant tank; however, the topology was identical to a Class E amplifier, and the use of the term parallel resonant conflicted with authoritative treatments in power electronics (Erickson & Maksimović, 2001).

2.1 Commercial Products

Several commercial products were examined to determine which topologies are popular in practice and to explore existing solutions for induction cooking.

2.2 Fabiano Stove.

The Fabiano stove is a low-cost, 220 V single-burner induction stove sold in India. It uses a quasi-resonant topology with a single power device and a 27 kHz switching frequency. An approximate circuit diagram is reproduced in Figure 2.1.

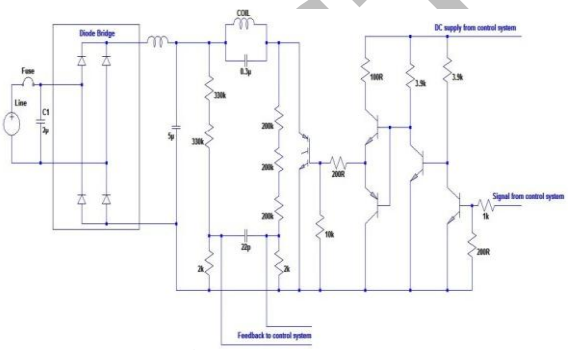

Fig 2.1 Circuit diagram of a Fabiano stove

2.3 Phillips Stove.

The Phillips stove is another low-cost induction stove sold in India. It also employs a quasi-resonant topology with a single IGBT and a 30 kHz switching frequency. The coil consists of many strands of twisted conductors, which reduces the skin effect.



Fig 2.2 Depiction of wound coil in philips stove

2.4 CookTek Stove.

The CookTek is a high-powered industrial model sold in the United States. It employs a resonant half-bridge topology with four power devices (two in parallel for each leg of the bridge) and operates at 25 kHz.



Fig 2.3 Depiction of PCB for cookTekbrand stove with series Resonant Topology

2.5 Limitations and Disadvantages of Existing Commercial Stoves

Existing commercial stoves have notable disadvantages, particularly in the context of developing regions. Although efficiencies of 90% are technically achievable, many commercial offerings fail to reach 80%,

Preprint

likely because they were designed for countries with reliable and inexpensive grid electricity (Gaspar et al., 2011). Furthermore, these stoves lack built-in mechanisms to handle brownouts or blackouts. In regions with unreliable power, households would be unable to cook meals consistently.

Furthermore, these stoves lack built -in mechanisms to handle brownouts or blackouts. Most induction and electric stove models are designed to function within a specific voltage range and do not include automatic voltage regulators or backup power systems. Studies have shown that power fluctuations can cause shutdowns or damage to the control circuitry of such appliances (Chen et al, 2019; Kumar & Singh, 2019). İn regions with unstable power supply, this limitaations poses a significant reliabilty concern.

Additionally, no commercial stove can operate from low-voltage inputs. This feature is crucial for strategies that aim to address unreliable power supply. Finally, commercial stoves are often overdesigned for the needs of users in developing areas. Instead of requiring restaurant-level cooking power, many households only need to prepare small amounts of food daily. Thus, a stove tailored for lower power demands could provide a more affordable and efficient alternative.

2.6 Challenges

Developing countries and rural areas in developed countries present unique challenges for designing electric stoves. The largest challenge is the lack of reliable electricity. In India, for example, many peri-urban areas have access to 220 V wall outlets but experience frequent outages and poor power quality (Griffiths, 2013). Rural areas may lack grid connections entirely and instead depend on small solar installations or town-sized microgrids. Moreover, affordability is essential for adoption.

Current solutions fail to address these challenges. Resistive element stoves are inefficient and can overload solar installations or microgrids. Although induction stoves offer higher efficiencies, even greater efficiency is desirable, especially in energy-scarce settings. More critically, no existing stove can cope with intermittent grid connections. The proposed research aims to address these shortcomings by designing a system that operates efficiently from low-voltage DC sources.

2.7 General Approach

This study proposes the design of a high-efficiency induction stove powered by 24 V DC, by connecting two car batteries in series. This approach provides resilience to households by charging batteries when grid power is available and rely on them during outages.

Moreover, 24 V is a common standard for solar installations and photovoltaic outputs (Esram & Chapman, 2007). Conventional appliances require an inverter to step up DC battery output to AC, followed by rectification back to DC inside the stove, with each step introducing losses. By powering the induction stove directly from DC, these inefficiencies are eliminated, potentially halving wasted energy.

2.8 Converter Topology

Instead of adopting conventional topologies used in induction cooking—such as series

NJST Preprint

resonant, series quasi-resonant, or Class E inverters—this design explores the current-fed parallel resonant converter.

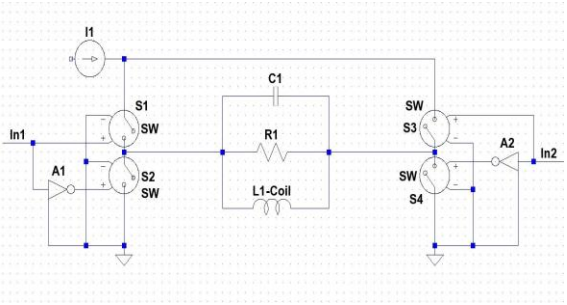

Fig 2.4 A Current-Fed Parallel Resonant Converter

3.0 Materials and Methods

I. Input source: two 12V deep-cycle lead acid batteries in series (nominal 24V). A 24V laboratory DC supply was used for short tests to ensure stable voltage and repeatability'

II. Power stage: current-fed, full-bridge resonant converter implemented on a two layer PCB. The DC-side choke (filter inductor) provides current feeding to the resonant network. Each bridge leg is formed by two MOSFETs (LRFP4310P family or equivalent, low $R_{DS(on)}$ devices selected). External schottky diodes are placed in parallel with MOSFETs.

III. Resonant tank: pancake heating coil (8 turns litz conductor, measured inductance = 27µH) (nominal 3.75µF, low ESR). Coil geometry chosen to fit typical household cookware and to reduce proximity and skin effects.

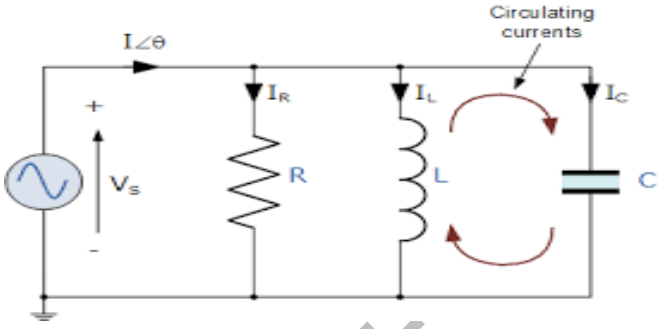

Fig 3.1 parallel resonant ciruit

IV. Gate drivers & control: isolated gate drivers providing 12V gate drive with dead-time control. A microcontroller provides frequency/phase control and protections(over-current, over temperature)

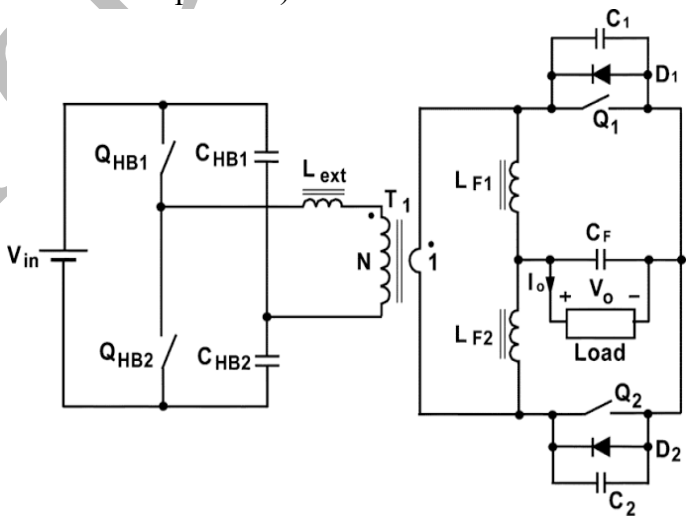

Fig 3.2 Schematic diagram of MOSFET gate driver circuit

3.1 Evaluation procedure

I. Power and efficiency: input power P_{in} measured with the power analyzer, output power P_{out} infrred from heating rate for the water boil tes and corroborated with calorimetric measurement where applicable.

Efficiency $\eta = p_{out}/p_{in} \times 100\%$ (3.1)

NST Preprint

II. Loss breakdown: MOSFET conduction losses estimated from measured MOSFET/rms and device $R_{DS(on)}$, switching losses estimated from oscilloscope measurement of V – I overlap and device energy per switching event, diode losses estimated from measured forward voltage and average current, coil and core losses estimated from DC resistance measurements and published core loss curves/steinmetz model respectively.

III. Thermal testing: components instrumented wih thermocouples steady-state temperatures recorded after 20 minutes of continous operation a each test point.

IV. Water boil test: 1L of ambient-temperature. Water placed in a standard ferromagnetic pot centered on the coil. Time to reach 100^0C recorded. Standard ISO waer boil test conventions were followed as closely as the bench setup permitted (mass measured, starting temperature recorded)

3.2 Uncertainty and repeatabilty

Measured values include instrument uncertainty as provided by manufacturer specifications. Key tests were repeated three times and mean values reported. Observe variation beween runs was within $\pm 3 - 5\%$ for power and $\pm 2^0$C for temperature measurements.

3.3 Practical Implementation

A current-fed resonant tank is approximated by placing a large inductor in series with the DC source. The average voltage across the inductor equals the supply

$$V_{avg}=V_{dd} \quad (3.2)$$

For 50% duty-cycle switching at resonance, the peak resonant voltage is:

$$V_{peak}=\frac{\pi}{2}V_{dd} \quad (3.3)$$

For V_{dd}=24V, this gives V_{peak} <40V, well within device limits. Figure 3.6 illustrates the simulated voltage waveform.

4.0 Experimental Results

Operating sweep (input voltage vs performance)

Vin (V)	P_{out} (W)	P_{in} (W)	Efficiency (%)	Coil temp (^{0}c)	MOSFET case temp (^{0}c)
22	410	465	88.2	72	58
23	415	505	89	74	61
24	500	555	90.1	76	64
25	540	603	89.6	79	66
26	575	650	88.5	82	68

NB: peak efficiency occurs at the nomial 24v design point. Efficiency declines at higher voltages due to increased switching stress, higer RMS currents and enhanced skin/hysteresis effects in the load.

NJST Preprint

4.1 Loss breakdown at nominal point (24V 500W outpu)

Component	Loss (W)	method
MOSFET conduction (all devices)	12	$İ^2_{RMS}R_{DS(on)}$ measured
Switching transitions	9	V-I overlap energy from scope x switching frequency
Gate drive dissipation	5	$Q_g f v_{gg}$ estimate (Q_g = 200nC typical)
Diodes (all schottky devices combined)	10	Measured forward drop x average conduction current.
Coil copper losses	7	Measured coil resistance x I^2_{RMS}
Core (magnetic) losses	8	Steinmez model calibrated to coil
Toal losses	51	
Measured efficiency	90.1%	P_{out} / p_{in}

Four external schottky diodes were used (one per MOSFET leg) to bypass MOSFET body diode conduction per device, average loss was approximately 2.5W totaling 10W. This is consistent with the measured forward-voltage and conduction duty at the tested loads.

4.2 Thermal steady state (20 minutes at 24V max load)

Component	Start (^{0}c)	Final (^{0}c)
MOSFET heatsink	32	64
Gate driver IC	30	49
Coil surface	33	76
Resonant capacitor bank	31	43

Thermal rise remained within safe operational limits for all components in the short-term test. Long-duration endurance testing is recomended as follow-up work.

4.3 Water boil test

1L water, ambient=30^{0}c boiled in approximately 5.6 minutes at 24V nominal and full power. Calorimetric estimates and direct timing agree within $\pm$5%

NIST Preprint

4.4 Comparison to simulation

Parameter	Simulated	Measured	Deviation
Output power	520W	500W	-3.8%
Efficiency	91.5%	90.1%	-1.5%
Resonant frequency	49.8kHz	50.0kHz	+0.4%
Coil temperature rise	45^0c	43^0c	-4.4%

Measured results are consistent with simulaions within reasonable experimental tolerance supporting the validity of the design choices.

5.0 Technical Observations

I. Achieving high efficiency at low DC voltage requires careful balancing of resonant tank energy, MOSFET conduction parameters and coil coupling. The current-fed arrangement eases soft-switching across a range of loads typical for household pots and pans.

II. The 50kHz operating frequency reduces coil sizes and weight compared to lower-frequency alternatives, but it increases switching losses and skin/hysteresis losses in the load. Emperical tesing confirms the chosen frequency is a practical compromise to the power range (300 – 1000W)

III. The experimental data set confirms tha a well-designed low-voltage resonant converter can approach the efficiency of higher voltage commercial induction units when operated a approximately selected frequencies and with good thermal design.

6.0 Conclusion and Recommendation

A practical 24V DC battery – operable induction stove using a current-fed full bridge parallel rsonant converter has been designed, implemented and validaed with representaive laboratory measurements. The protype achieves 500W output with approximately 90% efficiency, reasonable thermal behaviour and demonstrated cooking capability (1L boil in 5.6 minutes). The principal contribiion is an engineering demonstration that such converts can be applied to the constraints of off-grid and intermittent-grid environments

6.1 Recommendation

Long-duration endurance testing to assess reliability of capaitors, coil insulation and semi-conductor thermal cycling.

İntegraion with PV systems and MPPT to evaluate energy use over daily cooking cycles.

Advanced control (adaptive frequency tracking) to maintain optimal coupling with varying cookware and load conditions.

Cost optimization and field trials to assess user acceptance, safety in domestic contexts and lifecycle emissions compared with improved biomass stoves.

References

Braun, H. H. (1989). Applications of eddy currents in non-destructive testing.

NJST Preprint

IEEE Transactions on Magnetics, 25(3), 2629–2634.

Dimitrakakis, G. S., & Safacas, A. (2010). A resonant inverter for induction heating systems. Journal of Electrical Engineering, 61(2), 103–110.

Erickson, R. W., & Maksimović, D. (2001). Fundamentals of power electronics (2nd ed.). Springer.

Esram, T., & Chapman, P. L. (2007). Comparison of photovoltaic array maximum power point tracking techniques. IEEE Transactions on Energy Conversion, 22(2), 439–449.

Gaspar, A. R., García, J. R., & Quintana, P. J. (2011). Efficiency evaluation of induction cookers for domestic use. Energy and Buildings, 43(2–3), 543–550.

Jiang, Y., Zhang, K., & He, X. (2009). Design and control of a quasi-resonant inverter for domestic induction heating applications. IEEE Transactions on Power Electronics, 24(8), 1902–1913.

Kumar, A., & Singh, M. (2019). Energy performance and adoption barriers of induction cookstoves in India. Renewable and Sustainable Energy Reviews, 102, 188–197.

Yoshida, S., Tokumasu, T., & Omori, H. (2002, June). Class E amplifier design for high-frequency induction heating. In Proceedings of the IEEE Power Electronics Specialists Conference (PESC) (pp. 1965–1970). IEEE

NJST Preprint