COMPARISON BETWEEN AGRICULTURAL BY-PRODUCTS PERFORMANCE FOR FUEL BRIQUETTES PRODUCTION

Akos M. P.[1], Bature B. J.[1], Haruna I. B.[1], Yayock E. S.[1], Kallah I. M.[2], and Abosho N.[1]

[1]Department of Agricultural and Bio-environmental Engineering, Nuhu Bamalli Polytechnic, P.M.B 1061, Zaria, Kaduna State, Nigeria.
[2]Department of Agricultural Technology, Nuhu Bamalli Polytechnic, P.M.B 1061, Zaria, Kaduna State, Nigeria.
Corresponding author's e-mail; [1]pmakos19@nubapoly.edu.ng

Abstract: Abstract: The price of energy used for domestic application have gone beyond the reach of the poor, this has necessitated the need for an alternative energy source. This research is aim at evaluating the performance of Sawdust, Rice husk, and maize cobs in order to suggest the best alternative fuel for cooking. The residues were collected, hammered, milled and sieved to obtain uniform particles sizes (<2.2mm). The pulverized materials were mixed with starch in the ratio of 6:3 and densified into briquettes. The briquettes obtained were sun dried for 14 days. These briquettes were tested using a special cooking stove in terms of time duration to boil 0.5litres of water. Results obtained from the test-conducted showed maize cobs briquette takes least time (5.52 minutes) to boil 0.5 litres water followed by sawdust (6.50 minutes), and rice husk briquettes (14.20 minutes). The specific fuel consumption was 85g/l, 65g/l, 40g/l for maize cobs, sawdust, and rice husk briquettes respectively. Also, the burning rate was 30.80g/min, 20g/min, 5.63g/min for maize cobs, sawdust and rice husk. From the investigation, the calorific values for maize cobs, sawdust and rice husk briquettes are 13.82MJ/kg, 13.44 MJ/kg and 12.15 MJ/kg respectively. The calorific values obtained is above the threshold values for calorific energy which ranges from 6.28 MJ/kg – 6.99 MJ/kg. The study recommends the use of Maize cobs as the best alternative, utilization of these residues in up-grade form will go a long way reducing the impact of energy crises and environmental pollution to man.

Keywords: Fuel- briquettes**,** Maize-cobs, Rice-husk, sawdust,

INTRODUCTION

The term 'agricultural by-products' is used to describe the full spectrum of biomass materials that are produced as agricultural residues. It includes dung from animals and the wide range of different types of crop residues-materials such as millet stalks, maize cobs, cassava stems and coconut shells.

Urbanization as a result of population growth has increase the need for an alternative source of energy (Deac *et al.*, 2016). In Nigeria, the common sources of energy use are coal, crude oil, natural gas and hydro power while other sources of energy such solar, wind power are not fully put into use (Oladeji, 2010). One of the best energy sources that has a good potential and is non-polluting is the "biomass". Most part of Africa are using dung and crop residues as major domestic fuel, providing as much as 90% of household energy to many villages and a considerable proportion in urban areas too (Alhassan *et al.*, 2019). Large proportion of these biomass are produced during crop and animal production at farm centers this makes its collection simple and much easier. In Nigeria tons of these agricultural waste and municipal waste are generated annually and discarded instead of been fully utilized for energy generation.

Agricultural residues can be collected from farm centres and refined as supplementary fuel to provide family fuel needs (Ajimotokan *et al.*, 2018). Some agricultural residues such as dung cakes once dry, they become a very convenient

fuel, they lose their smell and are easy to store, even inside the house. And when they are needed to be used the cakes can be broken up into handy sizes for burning (Oladeji, 2010). Appropriate technology must be applied for effective use of this residue to improve on their burning efficiency with a minimum smoke to reduce the risk of illness emanating from ineffective use of solid fuel (Jekayinfa & Omassakin, 2005).

In Nigeria, energy utilization is characterized by the use of fossil fuel and wood fuel for a wide range of application. For applications like cooking, heating, lighting and so on, the type of fuel mostly used is kerosene, gas, electricity, wood and coal. Apart from wood, other sources of energy are not easily used by the poor populace because of cost.

This is because vast majority of Nigerian population are living in a state of poverty and cannot afford gas, electricity, kerosene or coal as energy source for domestic application because they are expensive and their price have gone beyond the reach of the poor (Ioannis *etal.*, 2016). This has necessitated the need for an alternative energy source; therefore, it has become imperative to start exploiting other sources of energy such as the 'biomass into high-grade fuel products with enhanced handling and combustion characteristics. One of such technology is briquetting, utilization of these residues in up-graded forms will ameliorate both problems associated with energy crises and environmental pollution.

This study is aim at comparing the performance of different agricultural by products which are sawdust, maize cobs, and rice husk since they are abundant, in order to suggest the best alternative fuel for cooking.

2. MATERIALS AND METHODS

2.1 Study location

The experiments were performed at Soil and Water Laboratory, Department of Agricultural and Bioenvironmental Engineering, Kaduna Polytechnic. Kaduna Polytechnic is located at the Headquarters of Kaduna State, North Western Nigeria.

2.2 Production of briquettes

Rice husk, Maize cobs were collected from various farms in Zaria and sawdust from sawmill. These were hammered milled and then grounded using burr mill to obtain uniform size (2.2mm mesh was used) the pulverized material was then mixed with cassava starch (binder) in the ratio 6:3 and cast into briquettes. The rectangular-shaped briquettes so obtained were sun dried to an average moisture content of 3.5% over 14 days period to avoid cracking (Grover & Mishra, 1996). Each of the briquettes has a length of 150mm×150mm and 900mm thickness. The average weight of each of the briquettes after drying is shown in Table 1. The briquettes have perforations (holes) for easy flow of air during combustion.

2.3 The Stove

The stove consists of the following component parts in section A labelled 1-10 as shown in figure 1. These includes 1. Combustion chamber 2. Pot frame 3. Pot stands 4. Pot stand holder 5. Stove handle 6. Air flow opening 8. Briquettes loading box.

The stove is an aid in carrying out the investigation. Mild steel was selected as the construction material since this has the tendency of warming up quickly and absorbing minimal heat. To achieve maximum heat transfer, the fuel bed to pot distance was kept as close as possible to minimize heat losses arising from the escape of hot gases. The stove has a loading door, through which the fuel (briquettes) could be loaded into the combustion chamber. It had multiple windows and holes on the sides and at the bottom of the combustion chamber respectively for ventilation (airflow) and also for immediate disposal of ash during fuel combustion as shown in Figure 1.

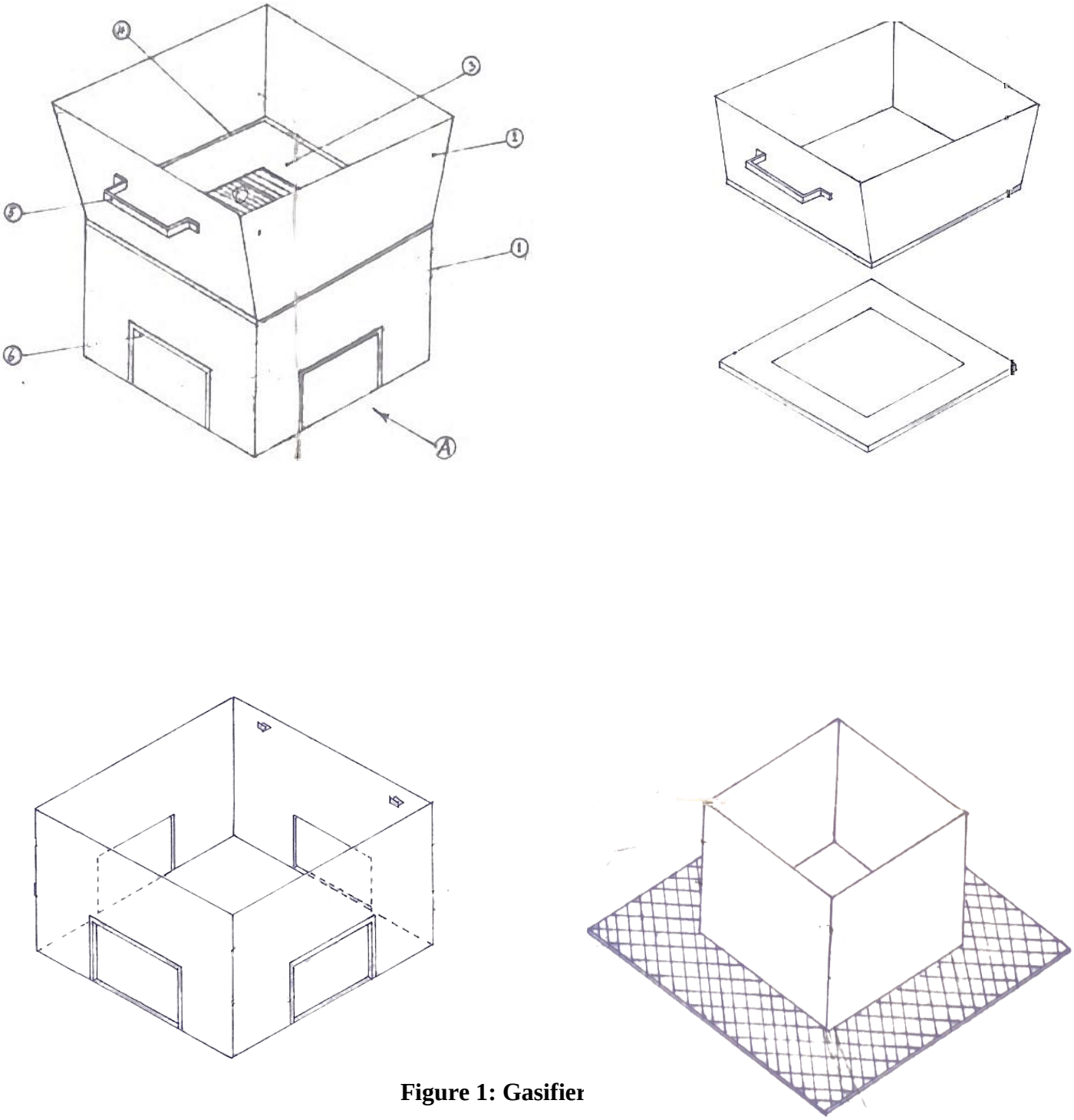

Figure 1: Gasifier

2.4 Test Site
The tests were carried out one after another in the Soil laboratory. This was done to ensure that the test was conducted under same environment to minimize any variation in the final result.

2.4.1 Water boiling test
The apparatus used for the experiment included two medium size aluminum pots, a weighing balance and a stopwatch.

The water boiling test was conducted accordance to Rathore (2008) procedure. The pot was filled with half litre of water. The initial temperature of the water was recorded. The weight of the fuel charge on the stove was noted before the pot was placed on the stove and the briquettes sprinkled with 10ml of kerosene, was ignited with a match. After a pre-ignition of the briquettes for 5 minutes the briquettes become hot the pot containing the water was then placed on the stove. The stopwatch was set to monitor the boiling water duration. The time taken for the water to reach boiling point was recorded. This test was repeated three times for each of the briquettes (sawdust, rice husk, and maize cobs) and the average time was calculated. The results are presented in Table 1.

2.5 Burning rate (BR):
Burning rate determines the rate at which a certain mass of fuel is combusted in air by bringing a given quantity of water to100^0 C. It is given by the equation below;
BR =average total fuel consumed (g)/Total time taken (min).

2.6 Specific fuel consumption (SFC):
It is defined as the amount of fuel consumed by boiling a given a quantity of water. It was estimated using the equation below;
SFC = Average total fuel consumed (g)/Total amount of water (litres)

3.0 RESULT AND DISCUSSION

The results of the comparative test are presented in Table 1 and are discussed below

Table 1: Results of Water Boiling Test

S/N	Type of fuel	Average weight of fuel (initial) (g)	Average final weight of fuel (g)	Average final weight of fuel used (g)	Average Time duration (minutes)
1.	Maize cobs	510	340	170	30.80
2.	Rice husk	950	870	80	5.63
3.	Sawdust	340	210	130	38.69

3.1 Boiling water test

Figure 2 below; represents the information obtained from the water boiling test conducted with briquettes made from sawdust, maize cobs, and rice husk. The time taken to boil 0.5 liters of water varied from 3.36 minutes for sawdust, 5.52 minutes for maize cobs, and 14.20 minutes for rice husk. This shows that sawdust absorbed more energy per unit time in the stove as compared to other types of fuel used for the test. According to Waniala & Nassimbwa (2021), findings and explanation about the effects of fuel density on heat release rate (HRR), the difference between boiling times of different fuels was attributed to the fact that the fuel briquettes with high bulk densities releases less heat whereas, those with low densities releases more heat. This is responsible for sawdust and maize cobs briquettes to boil the water first followed by rice husk briquettes which double the time duration.

3.2 Burning rates of test fuel

From Table 2 below, maize cobs are having the highest burning rate of 30.80g/min followed by sawdust briquettes with 20g/min and lastly rice husk which recorded 5.63g/min. Patel & Gain (2012), explained that specific fuel consumption increases as the bulk density of the fuel briquettes decreases and vice versa is true. Consequently, rice husk has higher bulk density in comparison to maize cobs and sawdust briquettes (Table 2). This is responsible for the longer time duration it took rice husk briquettes to boil 0.5 litre of water.

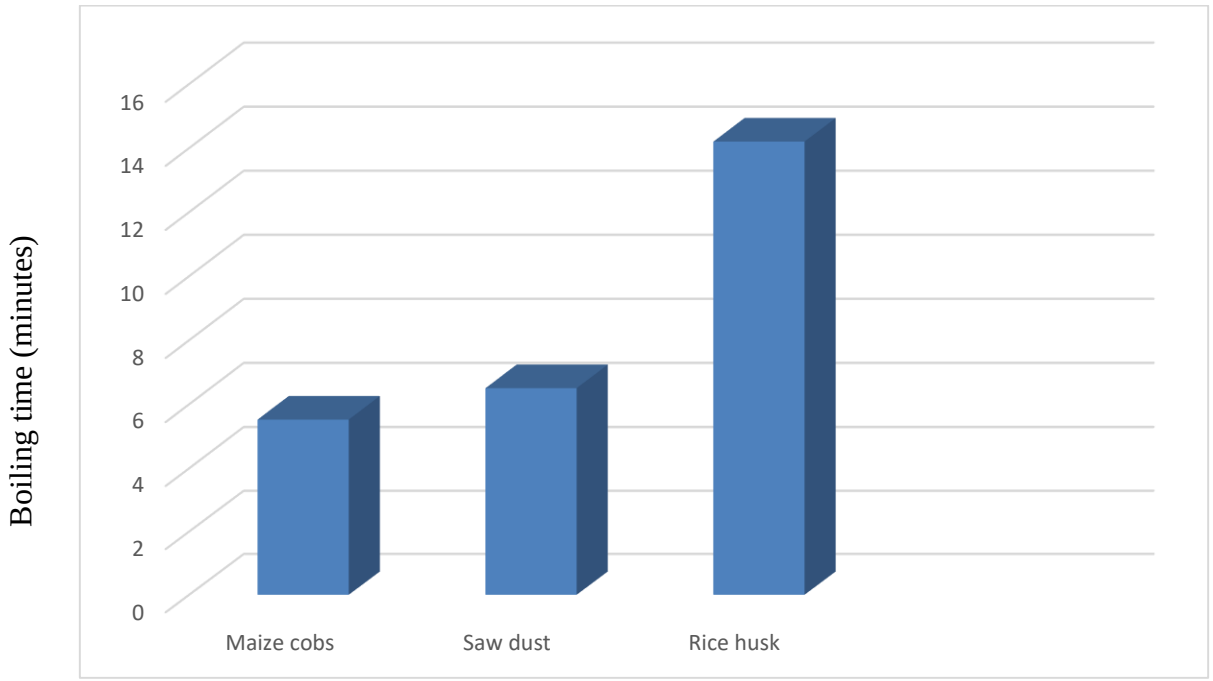

Figure 2: Time of Fuel Briquettes to Boil 0.5 Litre of Water

Table 2: Results of Burning Rate and Specific Fuel Consumption

S/N	Fuel Type	Burning Rate (BR) g/min	Specific Fuel Consumption (SFC) g/l	Average Time Duration (min)
1.	Maize cobs	30.80	85	5.52
2.	Rice husk	5.63	40	14.20
3.	Sawdust	20.00	65	6.50

3.3 Specific Fuel Consumption (SFC)

Results on Table 2, have shown that Rice husk has 40g/litre specific fuel consumption which is the lowest followed by sawdust with 65g/litre and maize cobs with 85g/litre which is the highest. Therefore, rice husk used little amount of fuel to boil 0.5 litres of water, followed by maize cobs and sawdust briquettes which consumed more.

According to Ariho *et al.* (2010) "specific fuel consumption" increases as the bulk density of the fuel briquettes decreases. Bulk density of the briquettes affects the rate of burning of the test briquettes. This is observed from the test result obtained where fuel briquettes that are more dense burn slowly while those ones that are less dense burns quickly. This has significantly The calorific values of maize cobs, rice husk and sawdust briquettes are shown in figure 3.

The calorific values of maize cobs briquettes exceed that of rice husk and sawdust, this agrees with findings of Sam *et al*. (2022). The calorific value is affected the time duration for the water to reach boiling point Permchart & Tanatvanit (2009), also noted that specific fuel consumption required for water sample to reach boiling point increases as the bulk density of the fuel briquettes decreases is true. Consequently, in reference to table 1 above, the results shows that sawdust briquettes are light in weight and tend to burn quickly though making it difficult to maintain a steady combustion. Sawdust briquettes and maize cobs took little time duration to bring 0.5 litres of water used for the test to boiling point as compared to rice husk which has doubled the time. In view of this, small quantity of the test briquettes was consumed (Table 2) to boil 0.5 litres of water in a minute.

3.4 Calorific Values

responsible for the trends in the boiling duration observed. Hence, the calorific values obtained are above the threshold values for calorific energy which ranges from 6.28MJ/kg-6.99 MJ/kg as noted by Gunther *et al.* (2012).

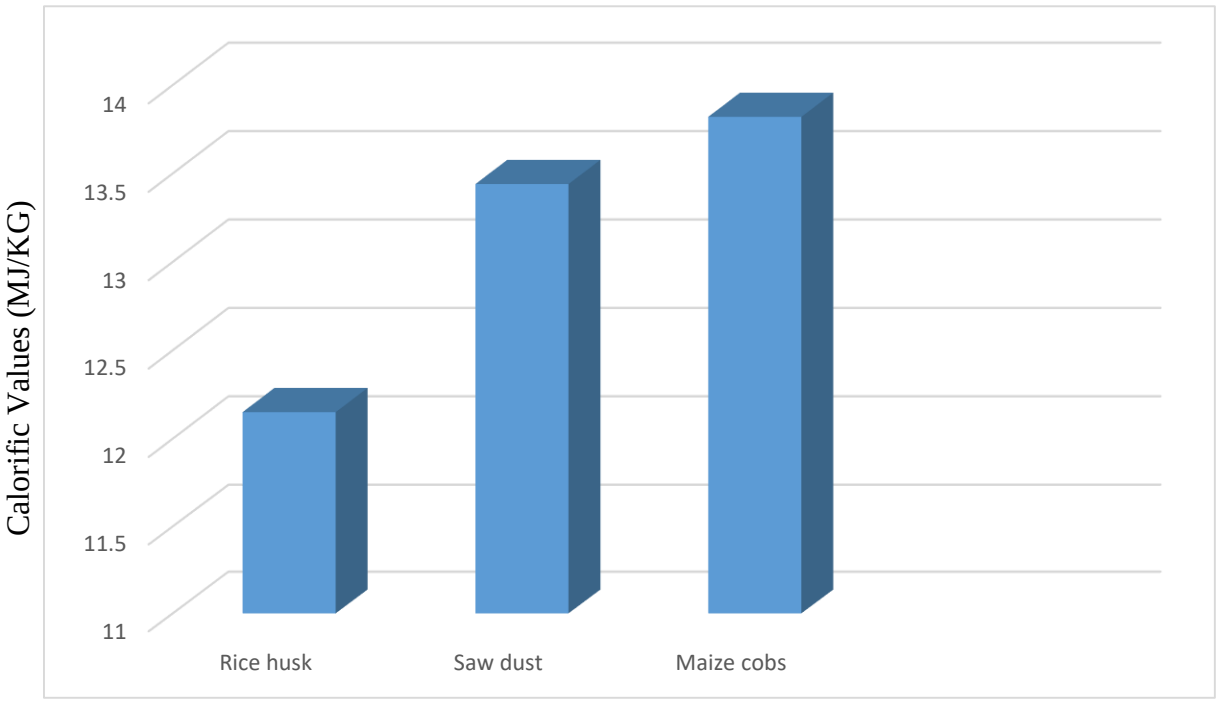

Figure 3: Calorific Values of Fuel Briquettes

4.0 CONCLUSION AND RECOMMENDATIONS

From the results obtained it was found that sawdust provides the best cooking fuel for domestic use but burn too quickly, with a burning rate of 30.80g/minutes which produced a steady flame. Maize cobs briquettes took little time (5.52 minutes) to take 0.5 litres of water to boiling point and have the highest calorific values of 13.5 MJ/kg. Conclusively, maize cobs are considered as a best substitute to charcoal and firewood.

Maize cobs are recommended for use, beside empirical research evidence, maize cobs are widely available for free and are found in large heaps in most part of Nigeria. The utilization of these residues in up-grade form will go a long way reducing the impact of energy crises, deforestation and environmental pollution to man. More research should be done on other agricultural residues, which may be good sources of fuel and energy for the future.

References

Ajimotokan, H.A, Ibitoye, S.E, Odusote, J.K, Adesoye, O.A., & Omoniyi, P.O. (2018). Physico-mechanical C haracterization of Fuel Briquettes made from Blend of Corn Cob and Rice husk. Journal of Physics: Conference Series, 1378(1).

Alhassan, E.A, Olaoye, J.O., Olayanju, T.M.A., & Okonkwo, C.E. (2019). An investigation into some crop residue generation from farming activities and inherent energy potentials in Kwara State, Nigeria. IOP Conference Series: Material Science Engineering.

Ariho, D., Tumutegyereize, P., & Bechtel, K. (2010). “Evaluation of the energy efficiencies of commonly available biomass fuels in Uganda in a

"Champion-2008" Top lit Updraft gasifier stove", p. 10.

Deac, T., Fechete-Tutunaru, L., & Gaspar, F. (2016). Environmental impact of sawdust briquettes use-an experimental approach. *Energy Procedia*, 85, 178-183.

Grover, P.D. & Mishra, S.K. (1996). Biomass Briquetting, Technology and Practices. Regional Wood.

Gunther, B., Gebauer, K., Barkowski, W., Rosenthal, M. & Bues, C.T. (2012). Calorific Values of Selected Wood Species and Wood Products, 70, 755-757.

Ioannis, G., Panagiotis, X., Dimitrios, K, Theodoros, B. & Kyriakos, G. (2016). An Experimental Determination of Gross Calorific Value of Different Agroforestry Species and Bio Based Industry Residues, *Natural Resources*, 7, 57-68.

Jekayinfa, S.O., & Omasakin, O.S (2005). The energy Potentials of Some Agricultural wastes as Local Fuel materials in Nigeria. I*nternational Commission of Agricultural Engineering*, 7(05), 1-10.

Oladeji, J.T. (2010). "Fuel characterization of briquettes produced from corn cob and rice husk residues". *The pacific journal of science and Technology*, 11(1), 101-106.

Patel, B., & Gain, B. (2012). "Biomass characterization and its uses as solid fuel for combustion". *Iranica journal of Energy and Environment*, 3(2), 123-128.

Permchart, W., & Tanatvanit, S. (2009) "Preliminary investigation on combustion characteristics of rice husk in FBC". *World academy of science, Engineering and Technology*, 56, 183-186.

Rathore, N.S. & Panwar, N.L. (2008). Renewable Energy Theory and Practice. *Himanshu* Publication.

Sam Obu, C.V., Amos, J., Christ-Ukaegbu, S.O., Dike Chijindu, P., & Odeniyi, O.M. (2022). "Production of Fuel Briquettes from a Blend of Corn cob and Rice husk". *International Journal of Research and Review*, 9(2), 349-978

Waniala, B., & Nassimbwa, F. (2021). An assessment of the performance of biomass (Agricultural) waste when used as fuels in a Gasifier Stove. *Student's journal of health research Africa*, 2(12), 12.